Copenhagen Bath
Bækkeskovvej
DK-2665 Vallensbæk Strand
CVR: DK32648622
Telefon: (+45) 3696 0747
contact@copenhagenbath.com
www.copenhagenbath.com

Sandfjord 90 left basin

SKU: 40010082

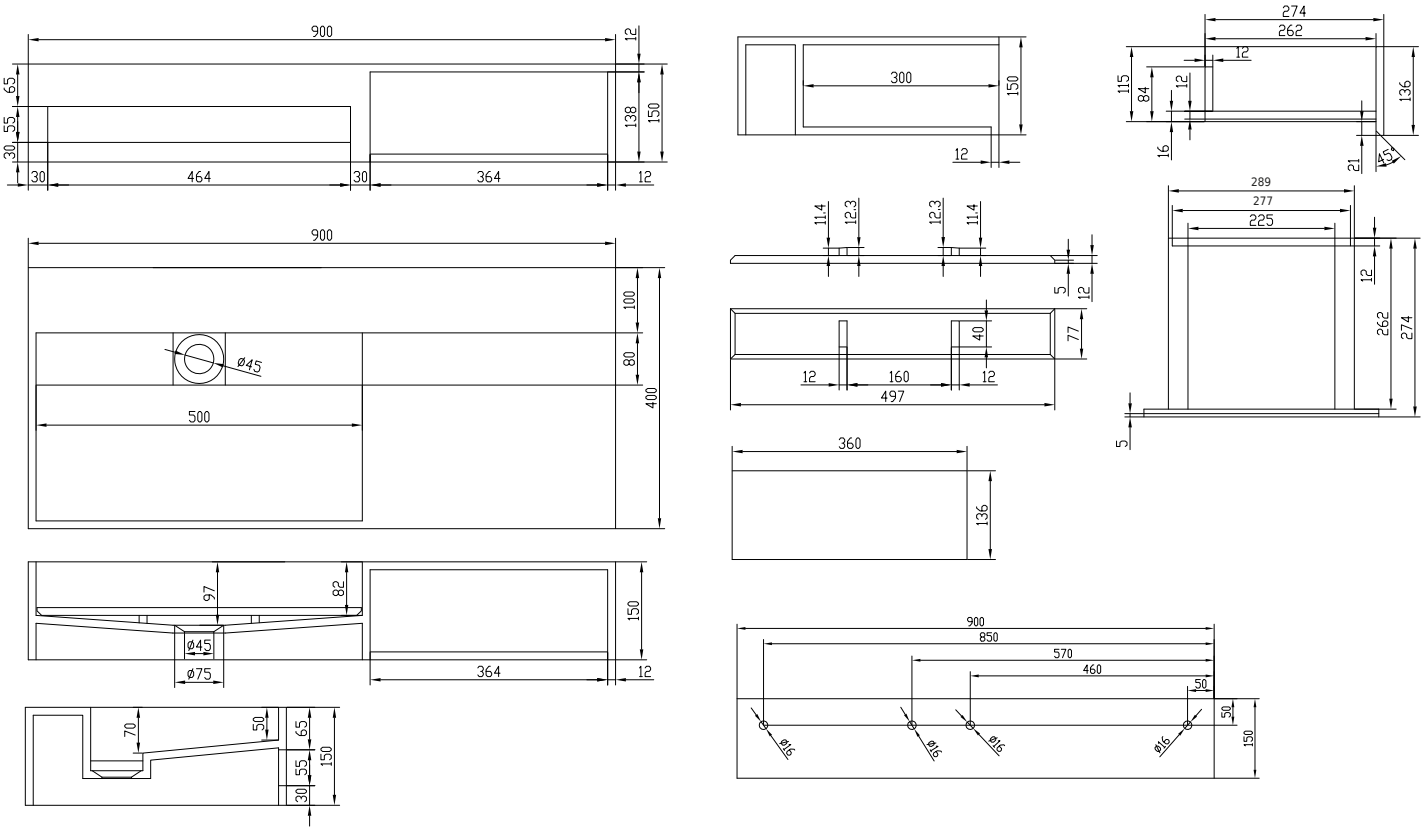

Colour:	Matte white
Size:	15cm / 90cm / 40cm
Weight:	28kg net

Sandfjord 90 left basin details: